Computer Systems
Lecture 2

Overview

- Input-Process-Output Model
- Hardware
- Software
- Machine instructions
- The von Neumann Model
- Harvard architecture

Input-Process-Output Model

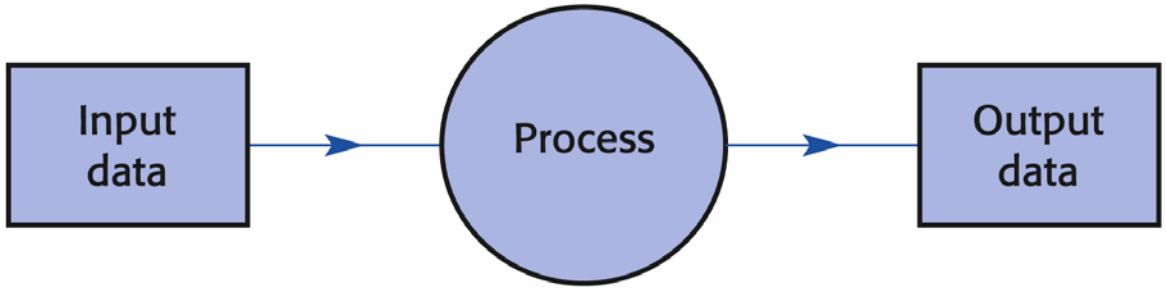

Fig. 2.1 …all under program control.

© Pearson Education 2001

- A highly conceptualised computer model.

Input-Process-Output Model

- The Input-Process-Output Model is the fundamental structure of the current generation of digital computers.
- The process is to be controlled by a special, custom-made program.
- This was an essential scheme of the von Neumann model.

Components of the Computer System

- There are three components required for the implementation of Input-Process-Output and von Neumann model(s):
  - Hardware.
  - Software.
  - Data that is being manipulated.

Hardware

- The most visible part of the computer system is the hardware.
  - CPU, memory, hard disk, keyboard, display screen, …
- It is physical - you can touch it.

Hardware (cont.)

- **Central Processing Unit (CPU)** is an active part which performs calculations and other operations.
- The **main memory** (primary storage or working storage), or RAM (for random access memory) holds data and programs for access by CPU.

- Memory is volatile…

Hardware (cont.)

- The **secondary storage**.
  - Long-term storage.
  - Holds programs and data.
  - Hard disk, CDs, DVD, etc.
- **Input devices**: keyboard, mouse, scanner, etc.
- **Output devices**: monitor, speaker, printer, etc.

Software

- The hardware of a computer (e.g. CPU) can carry out only **very simple operations** like adding numbers (very quickly).
- To make it perform useful tasks, these simple steps are combined in the form of **programs**, which are collectively known as **software.**

Machine instructions

- The CPU performs the execution of machine instructions.
- Every CPU has its own instruction set (100-200 instructions, typically).
  - For a particular machine, this set is fixed.
- Although the instruction sets of different CPUs are similar, there is no standard instruction set.

Machine Instruction Categories

- **Input-output**: *IN*, *OUT* (Intel x86 and Pentium, but does not exist in some CPUs), …
- **Data transfer and manipulations**: *MOV*, *ADD*, *MUL*, *AND*, *OR*, …
- **Transfer of program control**: *JMP*, *JC*, …
- **Machine control**: can halt processing, reset the hardware, *INT*, *HLT*…

Machine Instructions and HLL

- **H**igh **L**evel Programming **L**anguages (HLLs) are more suitable for programming than the languages of machine instructions.

- The programs in HLL still have to be translated to the machine codes. (Why?)

Von Neumann

- John von Neumann.
  - Was an Austria-Hungary-born American mathematician.
  - Made contributions to: quantum physics, functional analysis, set theory, topology, economics, computer science, numerical analysis, hydrodynamics.

The von Neumann Model

- The idea was formulated by von Neumann (late 1940s).
  - The computer is a **general-purpose machine** controlled by an executable program.
- In this context:
  - A program is a list of instructions used to direct a task.
  - Both program and data are held in computer's memory (store) and both represented by binary codes.
  - The fact that ***memory is re-writeable*** makes a von Neumann machine especially powerful..
  - A processor is an active part of the machine that executes the program instructions.

- How does the specification make possible the machine being 'general-purpose'?

The von Neumann Model (cont.)

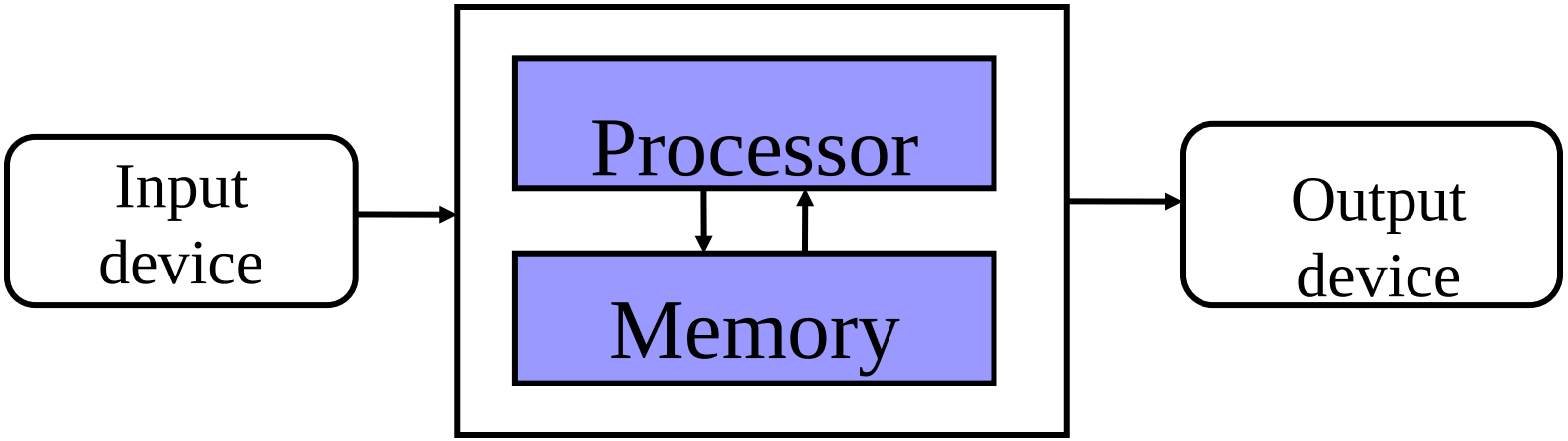

- Input device is for transmitting information from a user into the computer's memory.
- Output device enables a user to see results of the program being performed.
- **Von Neumann bottleneck**.
  - CPU is continuously forced to wait for vital data (and instructions) to be transferred to or from memory.

The von Neumann Model (cont.)

- Potential problems.
  - How could computers distinguish data from instructions since they are both represented by binary codes?
  - A 16 bit instruction code could, in different circumstances, represent a number or two characters.
- Solution.
  - Data and instructions are stored in memory.
  - CPU knows where to fetch program instructions.
  - Central Processing Unit (CPU) executes the program instructions.
  - Instructions and data have to be in a special coded form in order to be understood by CPU.

Von Neumann model (cont.)

- J. von Neumann.
  - The term "von Neumann architecture" appeared from his paper *First Draft of a Report on the EDVAC* dated June, 30, 1945.
- Konrad Zuse.
  - Mentioned the concept in a patent application in 1936.
- J.W. Mauchly and J.P. Eckert.
  - Wrote about the stored-program concept in December 1943 during their work on ENIAC - a general purpose stored-program computing machine.
- More details on history see at Wikipedia.
  - `Von Neumann architechture`

The von Neumann Model (cont.)

- Von Neumann's specification has remained sound for more than 60 years and is implemented in almost all computers today.
- A variation, "**Harvard architecture**", has gained ground recently.
  - Separates data from programs.
  - Requires different memories and access buses for programs and data.
  - The intention is to increase transfer rates, improving throughput. (Why Harvard architecture can achieve this?)

Harvard architecture

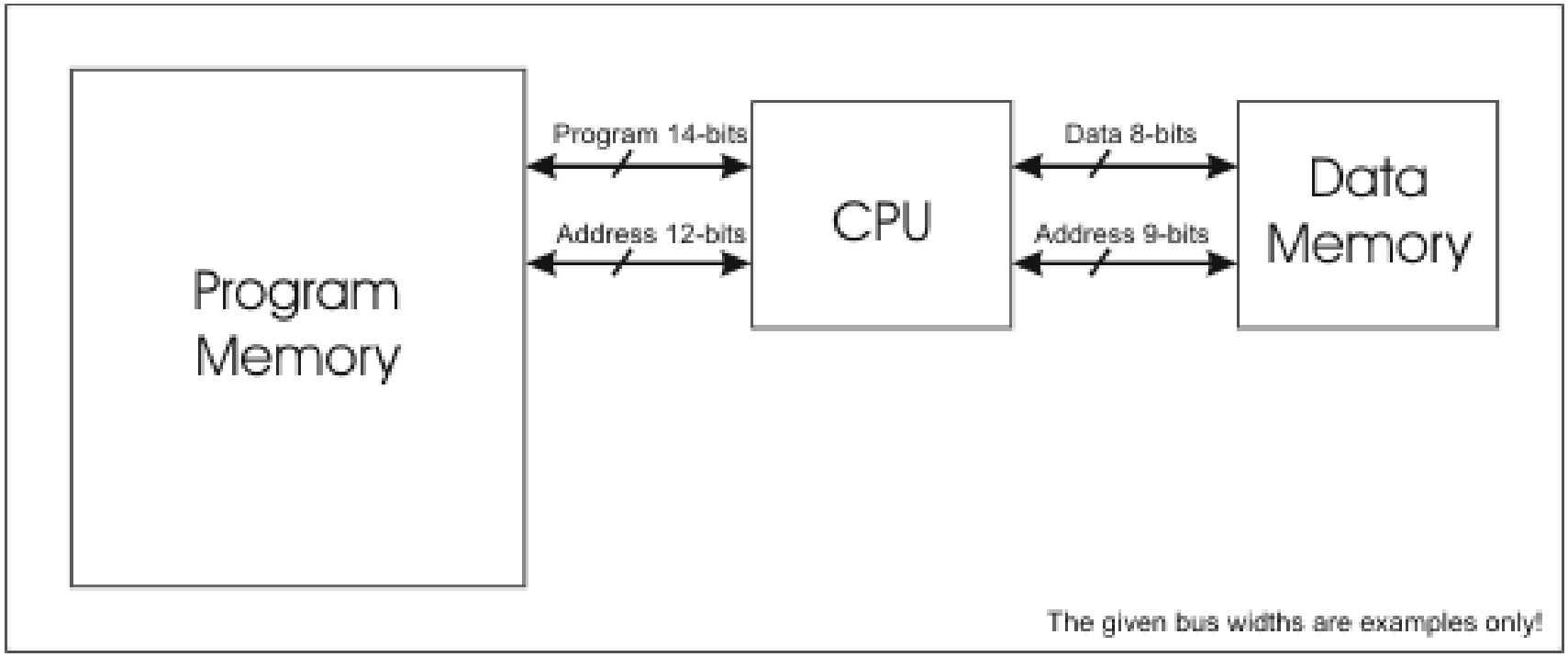

Who is the winner?

- From one point of view the VonNeumannArchitecture has "won" -- most memory (hard drives and RAM) can hold data as well as instructions

- From another point of view the HarvardArchitecture is still going strong -- most desktop CPUs have an internal "instruction cache" feeding the control unit and a completely separate "data cache"

Q&A

- Using a diagram, illustrate the concept of Input-Process-Output Model
- Which model gives the fundamental structure of the current generation of digital computers?
- Process is controlled by what?
- Highlight the three components required for the implementation of Input-Process-Output and von Neumann model.
- Name 5 examples of computer hardware.
- Identify the active part within a computer which performs calculations and other operations.

Q&A

- Which part of a computer holds data and programs for access by CPU?
- Give 3 examples of secondary storage.
- Give 3 examples of input devices.
- Give 3 examples of output devices.
- Define ‘software’.
- Q. Difference between these two models – Input-Process-Output model & von Neumann model?

Q&A

- For a particular machine, the machine instruction set is usually fixed. True or false?
- There exists a standard instruction set for industry purpose. True or false?
- High Level Programming Languages (HLLs) are more suitable for programming than the languages of machine instructions. Why?
- Mention 4 major categories of machine instructions.

Q&A

- Why HLL programs need to be translated before execution?
- What is the von Neumann model?
- Both ? and ? are held in computer's memory (store) and both represented by?
- Identify the von Neumann bottleneck.
- How could computers distinguish data from instructions since they are both represented by binary codes?

Q&A

- What is the main difference between von Neumann machine and Harvard architecture?
- Motivate the use of Harvard architecture.
- What is the additional cost from the usage of Harvard architecture?
- Most desktop CPUs have an internal "instruction cache" feeding the control unit and a completely separate "data cache“. This mimicks which computer architecture?

Readings

- [Wil06] Chapter 2, sections 2.1-2.3.